DOWNLOAD MULTILINGUAL USER MANUAL

code.ironbaltic.com/u/to8IdmDs

LAND ROLLER

Code 57.2000

Version 16012024

Keep this manual for future reference!

If you need any spare parts, please send this packaging data to your local dealer or to Iron Baltic sales@ironbaltic.com

57.2000 Land roller

CONTENTS

EC DECLARATION OF CONFORMITY 4
INTRODUCTION 5
SAFETY INSTRUCTIONS 6
SAFETY LABELS 7
PRODUCT DESCRIPTION 8
USER GUIDE 8
MAINTENANCE 9
LAND ROLLER ASSEMBLING GUIDE 10
SUPPORT WHEELS ASSEMBLING GUIDE 13

Iron Baltic OÜ

EC DECLARATION OF CONFORMITY

Manufactured by:	Iron Baltic OÜ
Address:	Põldmäe tee 1, Vatsla 76915
Product:	**Land roller**
Type:	**1500 mm**
Model:	**57.2000**

Hereby we confirm that this product is in conformity with the requirements of Directive **2006/42/EC,** applicable to the safety and functionality of machinery, regarding the replaceable equipment and it is in compliance with the standard **EN12100** Safety of machinery – General principles for design – Risk assessment and risk reduction.

In witness whereof CE marking is attached to the product.

Place and date of issue of the declaration: 20.04.2020

.....
Tiit Norak
Member of the Board

Iron Baltic OÜ
Põldmäe tee 1
Vatsla 76915
Estonia

tel (+372) 6533711
info@ironbaltic.ee
www.ironbaltic.com

INTRODUCTION

Thank you for choosing Iron Baltic product. This manual contains the technical details of the land roller and instructions how to assemble, operate and maintain the product safely. Unnecessary use of the product can result economic damage and personal injury, so it is very important that the person who using the product read and use this manual in accordance with the requirements. Any misuse of the product will release the manufacturer from liability for any damage or expense incurred.

NOTE: Photos and drawings in this manual may not necessarily depict the actual models of products or their accessories. They are merely given as a frame of reference and are based on the latest available information at the time of publication.

This symbol is used throughout the manual and on warning signs in order to warn users of the potential for serious injury. Before using the vehicle and product carefully read the safety instructions and make sure that you have understood them. Follow all instructions and ensure that everyone who uses the equipment follows them!

Keep this manual for future reference.

Based on the specifications for your model, please check that you have received all of the parts for your particular set

SAFETY INSTRUCTIONS

Most accidents occur due to negligence or carelessness. Avoid unnecessary accidents and follow the safety instructions given below.

TRAINING

1. Read thoroughly the safety instructions and terms of use.

2. Never allow children to operate the vehicle or product. Never allow adult persons to operate the vehicle or the product if they have not received the proper training

3. Neither the vehicle nor the land roller can be used while drunk or under the influence of drugs that affect perception or reaction.

4. Do not allow bystanders, children or animals into the work zone.

PROHIBITED ACTIONS

- Never operate the land roller on overly steep slopes.
- Never operate the land roller without all the protective parts properly installed.
- Do not operate the land roller before you have carefully read the whole operation manual.
- Never drive faster than 10km/h, or what the vehicle manufacturer recommends (the lower speed must be observed).
- Never carry any passenger on the land roller.

MANDATORY ACTIONS

- Follow all the instructions of the ATV manufacturer.
- Always use proper protective equipment (helmet etc.) when using the vehicle.
- Make sure that bystanders are moved to a safe distance when operating the device.
- Make sure that all of the safety stickers are in good condition. Replace damaged stickers as required.
- Reduce the speed of the ATV when working on a hillside or uneven terrain.
- Be careful when braking.
- The safe road-steadiness of the vehicle must always be ensured by using the correct accessories for the task in hand (chains, counterbalances, etc).
- Always check that all components are properly installed.
- Allways remain clear of moving parts and joints.
- Check and tighten the bolts after the first working hour and then after every ten working hours.
- Apply grease through grease nipple on the bearings after every 25 working hours or 4 times a year.

IF SOMETHING HAPPENS DURING THE WORK THAT COULD DAMAGE THE PRODUCT, AN INSPECTION OF THE DEVICE MUST BE CARRIED OUT TO IDENTIFY POSSIBLE DAMAGE. DAMAGE (CRACKS IN CONSTRUCTION OR WELDS, DEFORMED PARTS) CAN ENDANGER PROPERTY AND HUMAN HEALTH. THE DEVICE MUST NOT BE USED BEFORE THE DAMAGE IS REMOVED.

MAKE SURE THAT THE LAND ROLLER IS IN PERFECT WORKING CONDITION AND THAT THE TOWING COUPLING HEAD IS PROPERLY ATTACHED TO THE ATV HITCH BALL.

SAFETY LABELS

The safety labels shall be present on your land roller. If any of those labels is absent or gets damaged, contact your dealer in order to install new labels in place of the absent ones before operating the machine.

Meaning of safety labels

	Read the manual before use!
	Maximum permitted speed 10 km / h!
	It is forbidden to drive slopes over 10°!
	Make sure that all bystanders are at a safe distance while working with the device! Risk of collision!
	Avoid getting your hands and feet between moving parts!
	Make sure that all bystanders are at a safe distance while working with the device! Risk of flying objects!

PRODUCT DESCRIPTION

Iron Baltic land roller is a practical tool with a simple and strong construction, which can be used for levelling and rolling fields, grass, etc., thickening the ground or soil after planting seeds and for various other landscaping work.

The land roller is designed for ATVs or UTVs, but can also be used with a small tractor or any other vehicle equipped with a 50 mm / 2 " hitch ball.

The land roller mounted on the ATV's hitch is easily maneuverable and light enough not to sink into the soil, making the combination ideal for levelling fields after plowing without the vehicle leaving any tracks. The land roller attached to an ATV is capable enough for small and medium scale jobs. To add weight, the roller can be filled with water to compact the soil even more and create a smooth and even surface..

With the optional support wheels, the working and transport position can be changed by flipping the roller over.

Standard equipment :

- Land roller
- 360° rotating hitch coupling

Optional equipment :

- Support wheels

Product	Land roller
Model	57.2000
Dimensions	2150 x 1675 x 475 mm 2300 x 1675 x 475 mm (with support wheels)
Working width	1500 mm
Roller diameter	475 mm
Weight (empty)	118,5 kg 147,5 kg (with support wheels)
Weight (filled with water)	380 kg 405 kg (with support wheels)
Support wheels	22 x 11 x 8

Table 1: Land roller technical data

USER GUIDE

- Read the safety instructions before using the device!
- Check tow coupling connection to the tow beam before ride.
- Before ride, check is the towing coupling securly connected with tow ball (check the indicator on tow coupling)
- The highest speed is 10 km/h, or what the vehicle manufacturer recommends (the lower speed must be observed).
- To change the land roller from transport position to working position (or vice versa), uncouple the hitch from vehicle towbar and flip the land roller over. Turn the hitch to right position and reattach to towball.

MAINTENANCE

Maintenance activity:	Before and after work	Weekly	Monthly	Seasonally
Clean the land roller	●	●	●	●
Tire pressure, wheel bolts, tow coupling connection check	●	●	●	●
Visual inspection of parts fastening	●	●	●	●
Checking the condition of all connecting parts		●	●	●
Inspection of safety labels		●	●	●
Lubricate the tow coupling			●	●
Checking the wear rate of metal parts			●	●
Greasing roller bearings			●	●

- Always wash the land roller after use.
- If the tow coupling moves difficultly, add oil to places showde on the diagramm or contact manufacturer or licenced reseller.

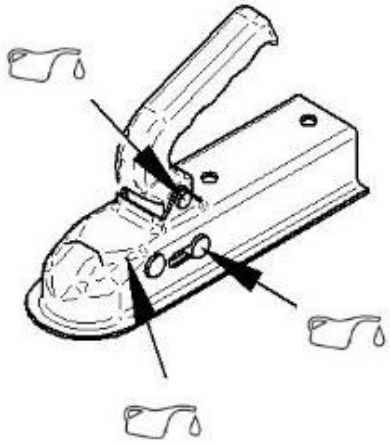

LAND ROLLER ASSEMBLING GUIDE

Pos.	Description	Code	Amount
1	Roller	57.2001	1
2	Roller frame	57.2002K	1
3	Towing frame	57.2004K	1
4	Tow coupling assembly	23.1120	1
5	Bearing UCP208 D40	OT.41.00.030	2
6	Tube cap 80x60	OT.10.07.086	2
7	Bolt M10x85 DIN931	OT.02.01.049	6
8	Bolt M16x130 DIN931	OT.02.01.160	4
9	Washer M10 DIN125	OT.04.01.040	12
10	Washer M16 DIN125	OT.04.01.060	8
11	Nyloc nut M10 DIN985	OT.03.02.050	6
12	Nyloc nut M16 DIN985	OT.03.02.070	4
13	O-ring Ø54.0x3 for roll cap	OT.16.01.002	1

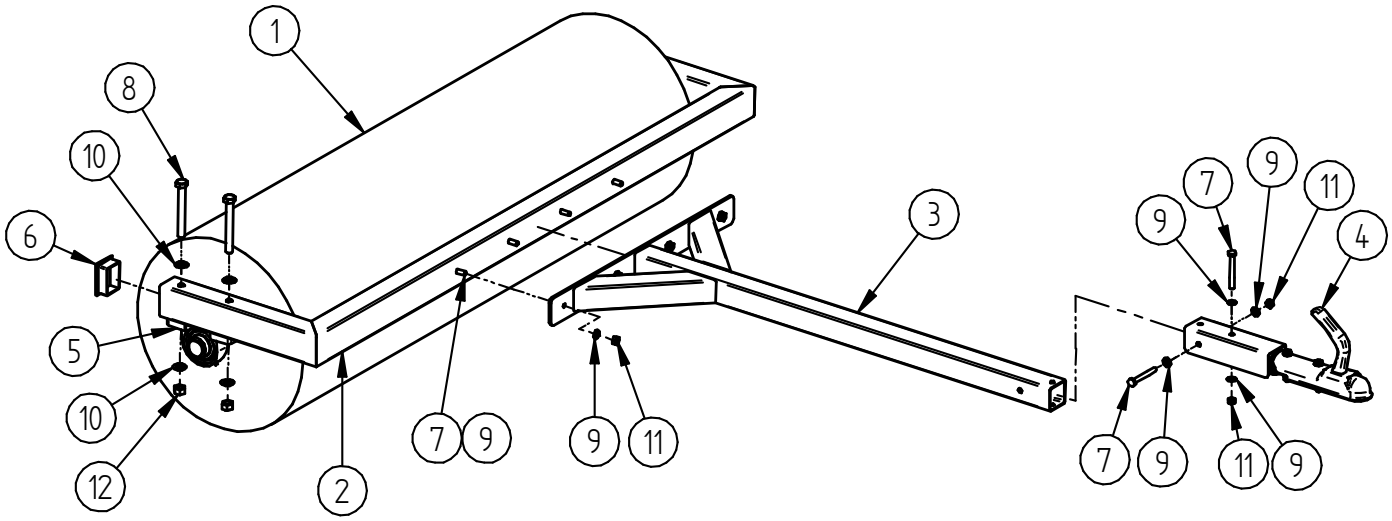

Step 1 Install towing frame (Pos.3) to the roller frame (Pos.2). Use bolts M10x85 (Pos.7), M10 washers (Pos.9) and M10 nyloc nuts (Pos.11)

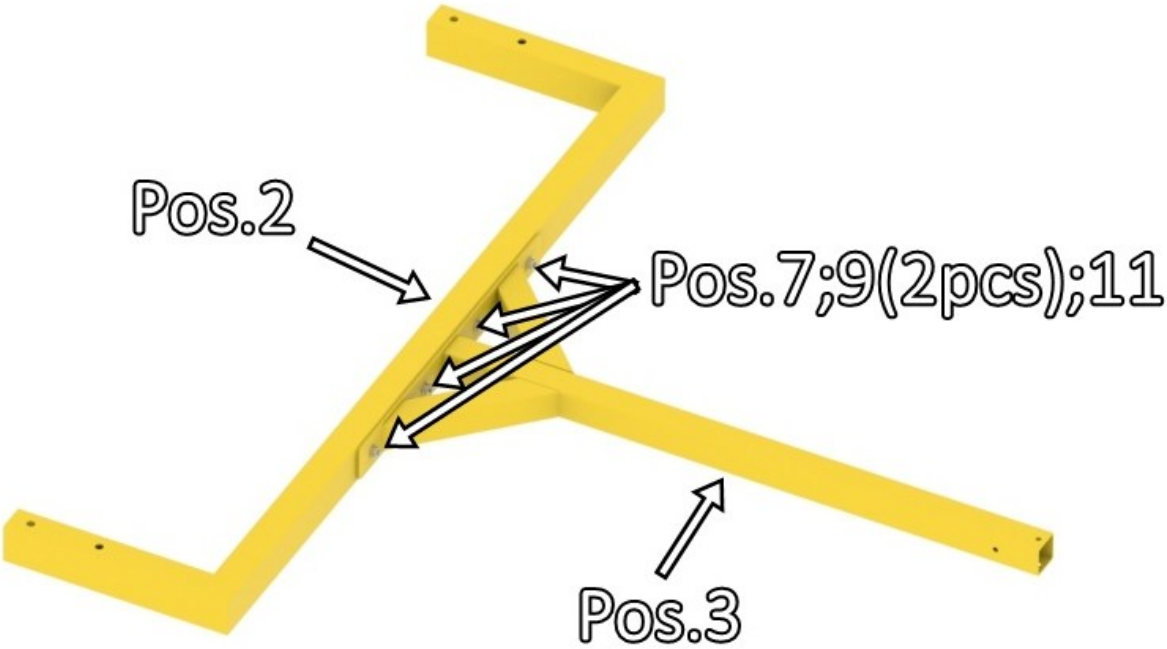

Step 2 Install tow coupling assembly (Pos.4). Use bolts M10x85 (Pos.7), M10 washers (Pos.9) and M10 nyloc nuts (Pos.11)

Step 3

Install roller (Pos.1) with bearings (Pos.5). Use M16x130 bolts (Pos.8), M16 washers (Pos.10) and M16 nyloc nuts (Pos.12)
NB! With this step it's recommended to proceed with two people, to prevent injuries to people and to the product.

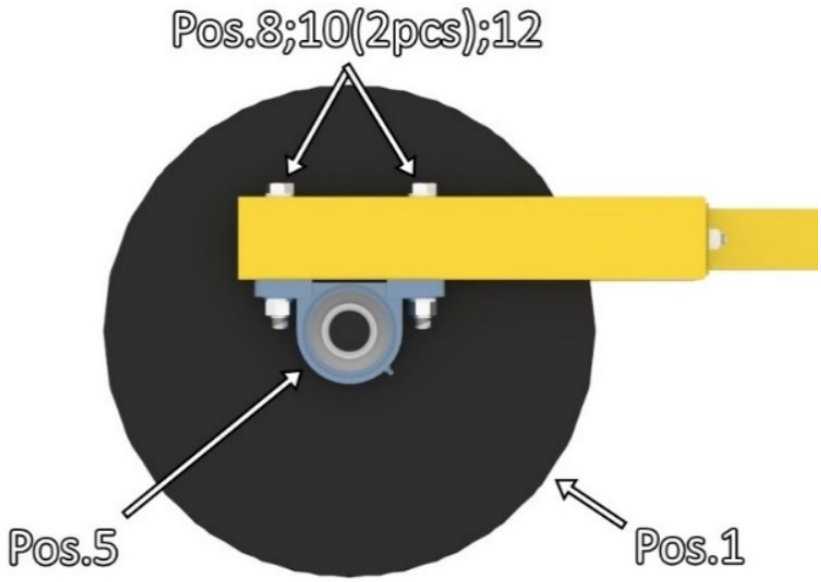

Step 4

Install tube caps (Pos. 6) to frame ends and tighten bearings adjustment screws.

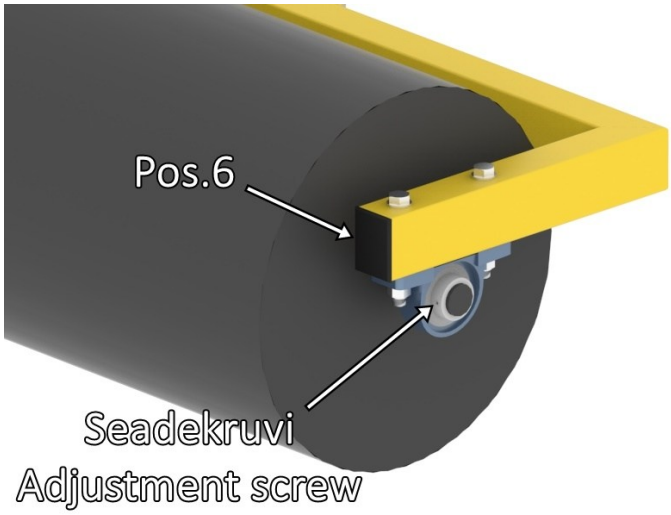

SUPPORT WHEELS ASSEMBLING GUIDE

Pos.	Description	Code	Amount
1	Wheel holder right	57.2051K	1
2	Wheel holder left	57.2052K	1
3	Wheel 22x11x8	OT.10.03.010	2
4	Tube cap 60x40	OT.10.07.064	4
5	Wheel bolt	OT.02.09.010	8
6	Bolt M16x140 DIN931	OT.02.01.163	4
7	Washer M16 DIN125	OT.04.01.060	8
8	Nyloc nut M16 DIN985	OT.03.02.070	4

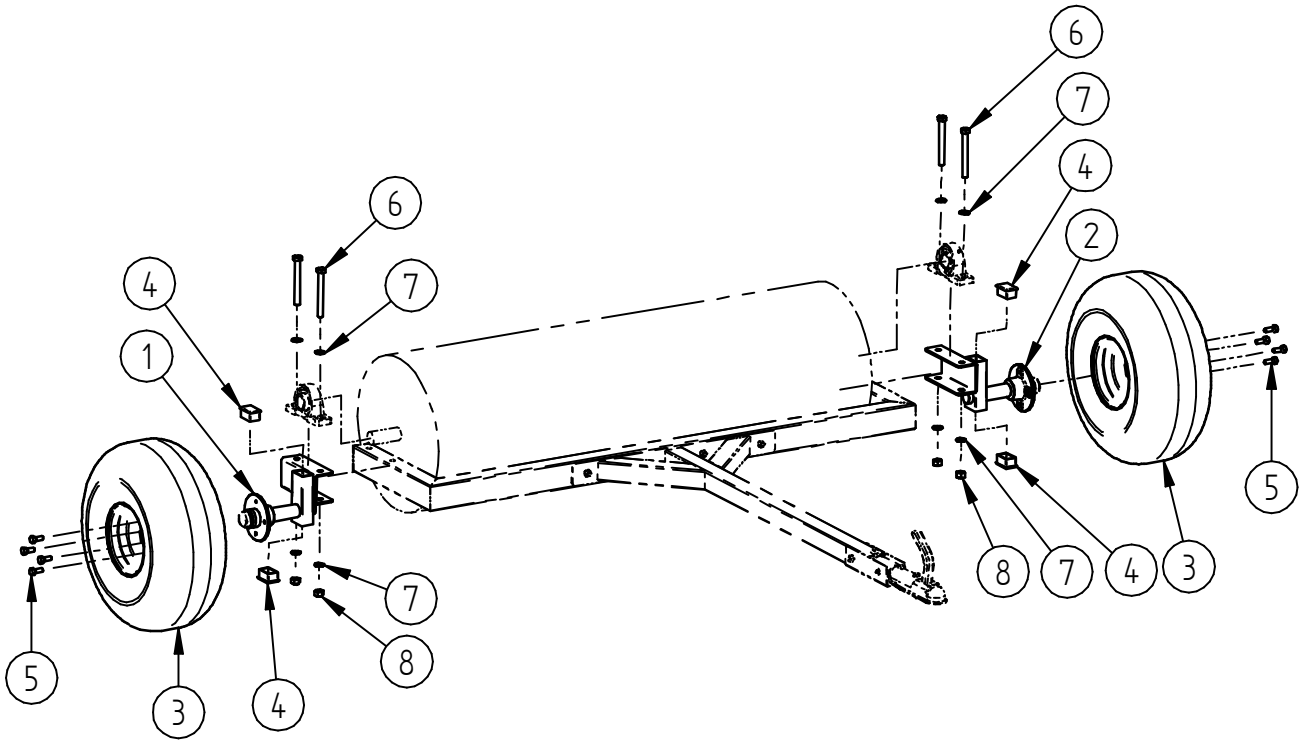

Step 1 Remove land roller original bolts.

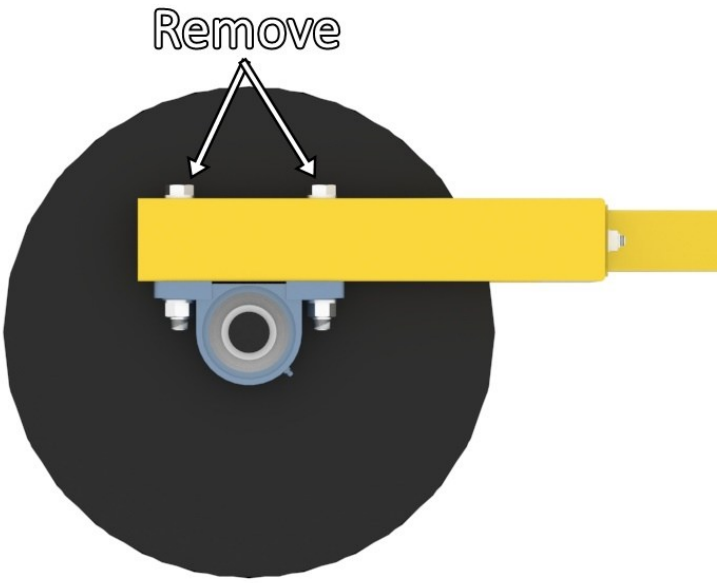

Step 2 Install support wheel holders (Pos.1 and Pos.2). Use M16x140 bolts (Pos.6), M16 washers (Pos.7) and M16 nyloc nuts (Pos.8).
NB! With this step it's recommended to proceed with two people, to prevent injuries to people and to the product.

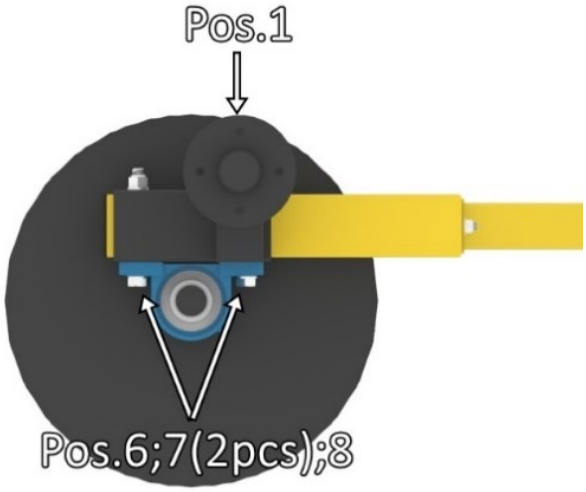

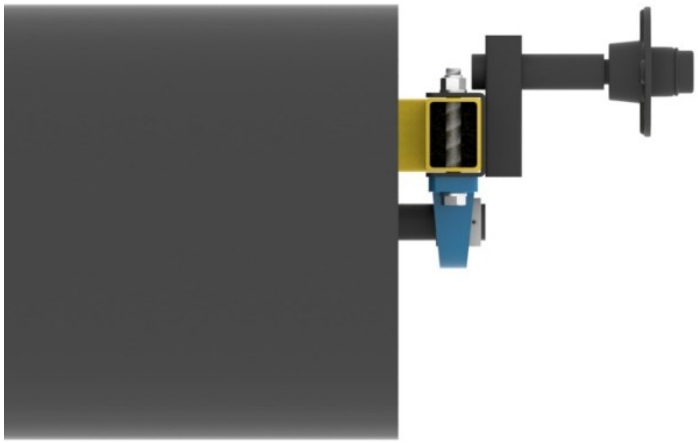

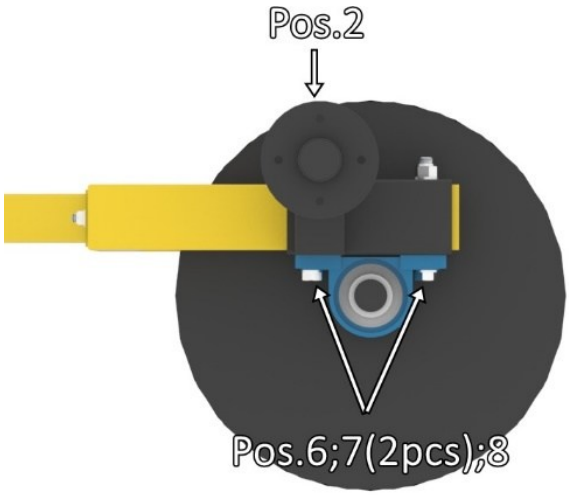

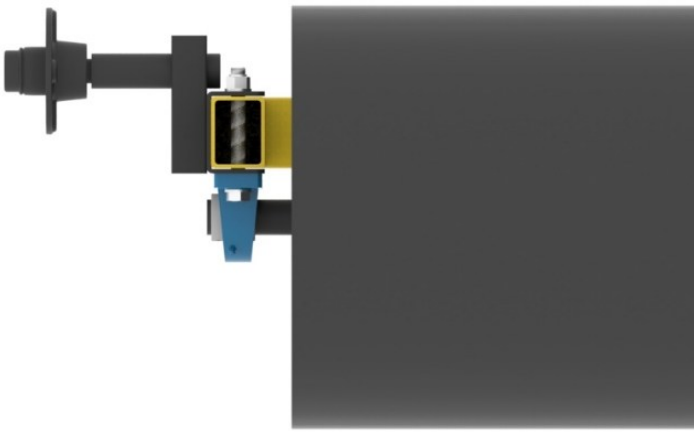

Step 3 Install wheels (Pos.3). Use wheel bolts (Pos.5).

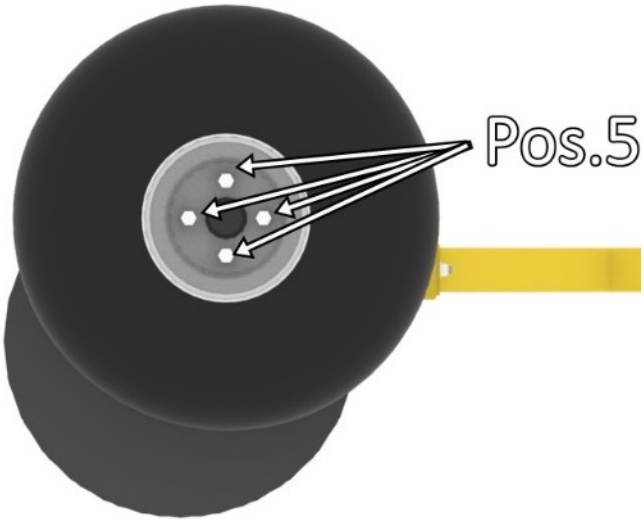

IRON BALTIC OÜ
Joa tee 17
Vääna 76903
Estonia / Europe

+372 6 533 711
sales@ironbaltic.com

www.ironbaltic.com
www.facebook.com/ironbaltic
www.youtube.com/user/ironbalticltd